# 200 l/min • 7 CFM • 12 m³/hr. Two Stage Rotary Vane Vacuum Pump

Photo shows Pump with optional inlet trap and exhaust mist eliminator installed. See page 16 to order these accessories. Power on/off switch, resettable circuit breaker and line cord are standard on pumps shipped with single phase motors.

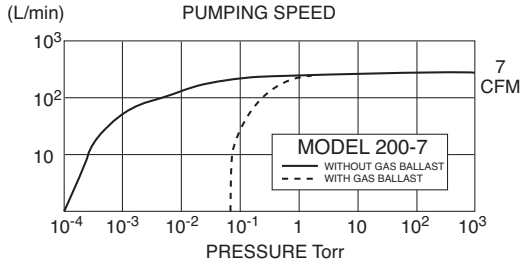


| | |
|---|---|
| Pumping Speed @ 60 Hz | 200 l/min, 7.0 CFM, 12 m³/hr. |
| Pumping Speed @ 50 Hz | 166 l/min, 5.8 CFM, 10 m³/hr. |
| Ultimate Pressure Gas Ballast Closed | $5x10^{-4}$ Torr, $6.7x10^{-2}$ Pa, .0006 mbar |
| Ultimate Pressure Gas Ballast Open | $5x10^{-2}$ Torr, 6.7 Pascal, .06 mbar |
| Standard Motor; On/Off Switch, Circuit Breaker & Thermal Protection, CE Mark, complies with | 115/208-230V, 1ø, 1/2 hp, 60 Hz (50Hz Avail) Machinery Directive 98/37/EC |
| Optional Motors | See ordering information |
| Power Connection | 6 ft. (2 m) 3 conductor cord |
| Motor speed @ 60 Hz | 1700 r.p.m. |
| Noise Level | 50 dB |
| Water Vapor Tolerance | 25 mbar, 19 Torr |
| Oil capacity | 500 cc; 0.53 Qt. |
| Weight Net: 50 lbs., 23 kg | Shipping: 54 lbs., 24 kg |
| Intake & exhaust type/diameter | NW-25 standard (NW-16 or 26 mm O.D. Tube optional) |
| Ambient operating temperature | 7° to 40°C, 45° to 104°F |

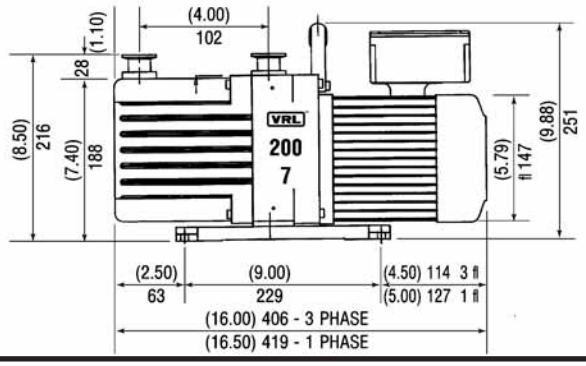


## Features

- Extremely Quiet • Anti Suck Back Design
- Satisfaction Guaranteed • Two Year Warranty
- Virtually Vibration Free • Motors for Any Voltage
- Complies with Machinery Directive 98/37/EC

## Applications

- Backing Turbo Pumps • Electron Microscopes
- Vacuum Ovens & Furnaces • Freeze Dryers
- Cluster Tool Load Locks • Sputter & Deposition Systems

## Typical Installation

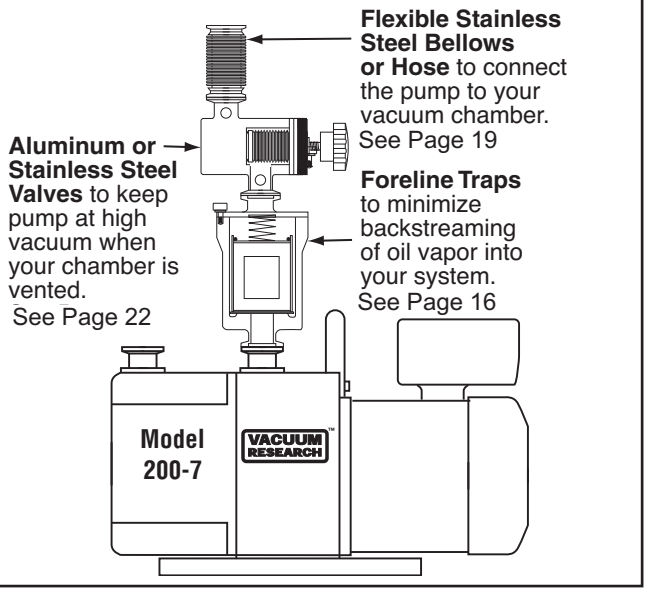


## Ordering Information

### MODEL 200-7 Vacuum Pump With Motor:

Note: Tolerance is ± 10% of nominal value for all voltages.

115 or 208 to 230V, 60 Hz, 1ø, 0.4 kw (1/2 hp)
Full load amps: 8.5 or 4.5 to 4.0 amps
**p/n 200-115/230-60 or 200-115/230-60-NW16** . . . . . **$1745.**

115 or 230V, 50 or 60 Hz, 1ø, 0.4 kw (1/2 hp)
Full load amps @ 50 Hz; 8.8 or 4.4 A @ 60 Hz; 7.2 or 3.6 A
**p/n 200-115/230-50/60 or 200-115/230-50/60-NW16** . . . . . **$1745.**

230 or 380V, 50 or 60 Hz, 3ø, 0.4 kw (1/2 hp)
Full load current: 1.82 or 1.3 A
**p/n 200-OPT-380-50/60 or 200-OPT-380-50/60-NW16** . . . . . **$1745.**

230 or 460V, 60 Hz, 3ø, 0.4 kw (1/2 hp) Full load current: 1.8 or 0.9 A
**p/n 200-230-/460-60 or 200-230-/460-60-NW16** . . . . . **$1745.**

**Exhaust Mist Eliminators** . . . . . **See Page 16**

**Optional NW-16 Inlet & Outlet** . . . . . **$50.**

**Fomblin:** For pumps filled with Fomblin PFPE fluid add to p/n **"Fomblin"** and increase the price to . . . . . **$2160.**


**Vacuum Research Corp. • 2419 Smallman Street • Pittsburgh, PA 15222 USA • www.vacuumresearch.com**
**Phone: 800-426-9340 • 412-261-7630 • FAX: 412-261-7220 • e-mail: VRC@vacuumresearch.com**